PRODUCT ID: 2888

Post

MODEL

P60B

DIMENSIONS

60" H x 6" W x 6" D (est. 7.118 lbs)

CONSTRUCTION

Finish: Duranodic Bronze
Material: 2 1/4" x 3" extruded aluminum post with one sign mounting channel, end cap and 6" sq. welded aluminum base plate. Base plate is 3/16" thick with pre-drilled anchoring holes. Sign mounting hardware and set screw for securing sign to post included.

Signal-Tech
4985 Pittsburgh Ave.
Erie, PA 16509
Phone: (877) 547-9900
Fax: (814) 835-2300
Email: sales@signal-tech.com
Website: www.signal-tech.com

Product View

NOTE: Sign image may not exactly represent the finished product. For illustration purposes only.

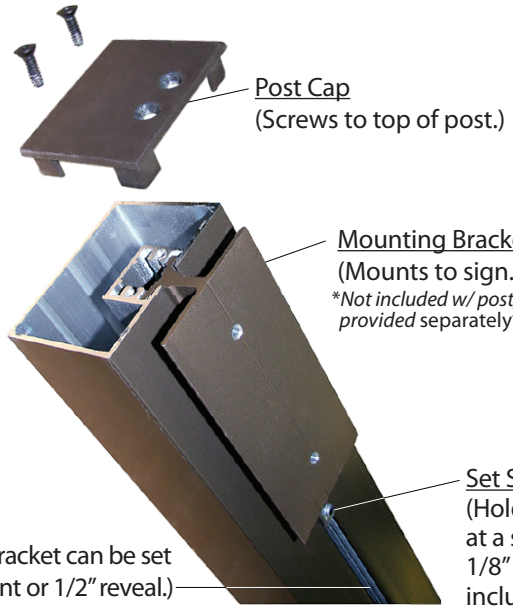

Baseplate Detail

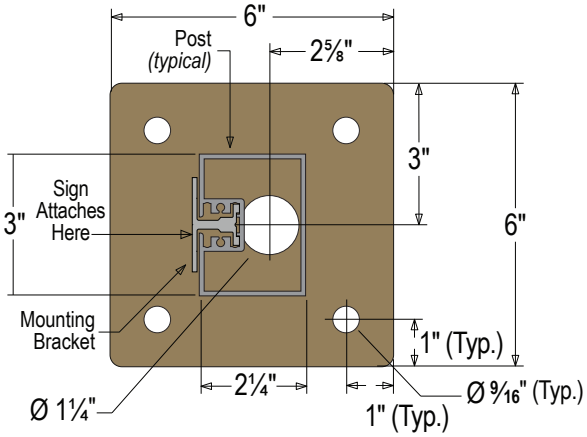

Copyright (C) 2024 Signal-Tech